JCE DigiDemos: Tested Demonstrations

edited by
Ed Vitz
Kutztown University
Kutztown, PA 19530

A Dramatic Classroom Demonstration of Limiting Reagent Using the Vinegar and Sodium Hydrogen Carbonate Reaction

submitted by: **Romklao Artdej**
Institute for Innovation and Development of Learning Process, Faculty of Science, Mahidol University, Bangkok, Thailand 10400

Tienthong Thongpanchang*
Department of Chemistry, Faculty of Science, Mahidol University, Bangkok, Thailand 10400; **tettp@mahidol.ac.th*

checked by: **Stacy DeWees Hovede**
Department of Chemistry, Michigan State University, East Lansing, MI 48824

The reaction between sodium hydrogen carbonate ($NaHCO_3$)[1] and vinegar (CH_3COOH) has been widely used to demonstrate concepts of stoichiometry and limiting reagent *(1–7)*. Aware that visualization is important to chemistry understanding and that it can arouse students' curiosity and enthusiasm, *(8)* we describe a dramatic and practical demonstration that allows students to discover the concept of limiting reagent by observing the change in gas volume when a fixed volume of vinegar reacts with a gradually increasing mass of sodium hydrogen carbonate.

Experiment

Materials

- Sodium hydrogen carbonate ($NaHCO_3$)
- Vinegar (5% acetic acid, CH_3COOH)
- Saturated sodium chloride solution (NaCl) with food dye
- 125 mL Erlenmeyer flask
- 250 mL graduated cylinder
- 1000 mL beaker
- Gas outlet set
- Stand and clamp
- Pipet
- Glass vial
- Forceps
- Spatula
- Parafilm
- Rubber band
- Adhesive tape

Procedure

One experiment setup is shown in Figure 1. To prepare the reaction vessel, pipet 10 mL of vinegar into a 125 mL Erlenmeyer flask. Then use forceps to place, with great care, a vial containing $NaHCO_3$ (record an exact mass) into the Erlenmeyer flask. To prepare the gas trap, fill a 250 mL graduated cylinder with saturated sodium chloride solution[2] *(9)*, turn it over[3] *(10)*, and immerse in a 1000 mL beaker that also contains the same solution.[4] Attach the gas outlet assembly (Figure 1) to the gas trap with adhesive tape and a rubber band. Gently insert the stopper of the gas outlet assembly into the Erlenmeyer flask.

A series of 12 experiments are used for the demonstration. Every setup is identical except for the mass of $NaHCO_3$, which gradually increases by 0.1 g from 0.0 g to 1.0 g in the series of experiments. The level of NaCl solution in each beaker should be adjusted to the same height. The 12 setups are shown in Figure 2 with the Erlenmeyer flasks behind the beakers and graduated cylinders. When the demonstration setup is ready, promptly swirl each reaction vessel, causing the vial fall down and allowing the $NaHCO_3$ in the vial to react with vinegar in the Erlenmeyer flask. Students will observe the gas generated from the reaction, which is trapped in the graduated cylinder. Swirling should be continued until no more gas bubbles evolve. Observe and record the volume of gas in each trap.

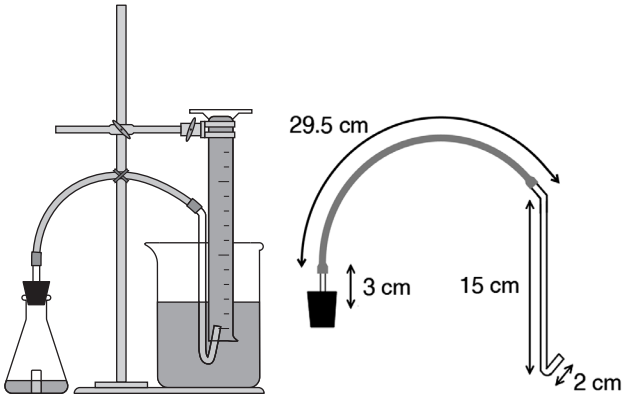

Figure 1. Equipment setup: (left) schematic drawing of each setup and (right) detailed dimension of gas outlet.

Observation

As soon as $NaHCO_3$ and vinegar are mixed, gas evolves abruptly from the reaction and replaces the solution in the graduated cylinder. After the reaction is complete, students will immediately see the change in CO_2 volume relative to the mass of $NaHCO_3$ added as shown in Figure 2. As the amount of acid remains constant, increasing the amount of $NaHCO_3$ produces more gas until reaching the point where the gas volume does not increase no matter how much $NaHCO_3$ is used.

Explanation

The reaction can be described as follows:

$$CH_3COOH(aq) + NaHCO_3(s) \rightarrow CH_3COONa(aq) + H_2CO_3(aq) \quad (1)$$

$$H_2CO_3(aq) \rightarrow H_2O(l) + CO_2(g) \quad (2)$$

Thus, the overall reaction is

$$CH_3COOH(aq) + NaHCO_3(s) \rightarrow CH_3COONa(aq) + H_2O(l) + CO_2(g) \quad (3)$$

From the overall reaction, carbon dioxide gas is produced and its volume can be measured by using a principle of liquid displacement by gas *(11, 12)*. The change in pressure that results from the varying height of the water column has a negligible effect on the volume. A plot of mass of $NaHCO_3$ versus gas volume in the trap is shown in Figure 3. Apparently, the CO_2 volume depends on both the amount of $NaHCO_3$ and vinegar. In the early experiments (no. 0–6), it is found that the volume of CO_2 increases when the amount of $NaHCO_3$ is increased. Thus $NaHCO_3$ is the limiting reagent (vinegar is excess). However, in the experiments no. 8– 11, CO_2 volume remains steady indicating that the amount of $NaHCO_3$ is now in excess of the amount of vinegar. Accordingly, vinegar now becomes a limiting reagent.

The position in the graph where the slope changes is equivalent to the end point and it corresponds to 0.72 g of $NaHCO_3$.

Hazards

There is no significant hazardous material. However, vinegar and saturated sodium chloride are mildly corrosive.

Discussion

We discovered that having six students participate in the demonstration by swirling all reaction flasks at once produced dramatic visualization since the change in the CO_2 volume could then be observed simultaneously. The mass of $NaHCO_3$ at the equivalence point (0.72 g in this experiment) could be used to calculate the concentration of acid in vinegar, which was equal to 5.17% (compared to the concentration of 5.36% obtained by titration).

It was found that preparation of this demonstration by having the volume of vinegar fixed and the mass of $NaHCO_3$ varied is much more straightforward than having a fixed mass of $NaHCO_3$ and varying the volume of vinegar, although both gave similar results.

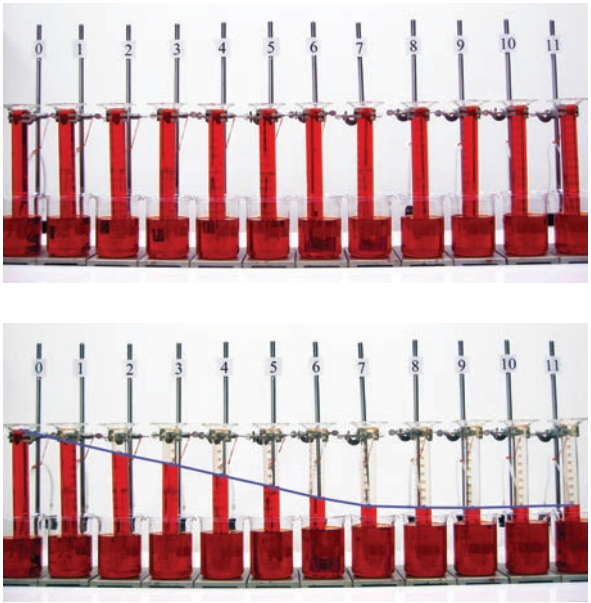

Figure 2. Demonstration setup; (top) before starting experiments and (bottom) upon reaction completion.

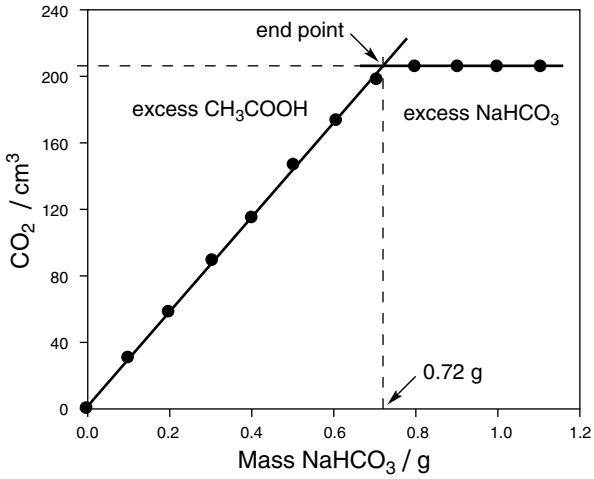

Figure 3. Volume of CO_2 in the graduated cylinder versus the mass of $NaHCO_3$. The position where the slope changes corresponds to the end point.

This demonstration could also be used in the high school laboratory, as a model to introduce students to the concept of titration.

Acknowledgments

A scholarship from Cooperative Research Network from the Ministry of Education for RA and financial support from the Institute for Innovation and Development of Learning Process, Mahidol University are gratefully acknowledged. Comments and suggestions from Bhinyo Panijpan and Yodhathai Thebtaranonth are also gratefully acknowledged.

Notes

1. Baking soda could also be used as the source of sodium hydrogen carbonate. In this case the instructor may want to mention that the production of gas is the same process used in baking.
2. Saturated sodium chloride solution is used in this demonstration to minimize the solubility of carbon dioxide in solution. Colored solution is for visual aid: red is highly recommended.
3. We suggest the use of Parafilm to prepare an air-free gas trap. First, completely fill the graduated cylinder with saturated sodium chloride solution and then carefully seal the filled cylinder with Parafilm to ensure that there are no air bubbles remaining in the trap. Turn the filled cylinder upside down and then immerse the cylinder in the beaker containing the same solution. Finally use forceps to pull the Parafilm off.
4. No gas bubbles should remain in the graduated cylinder and the total volume of the solution in both the cylinder and beaker should not exceed 800 mL.

Literature Cited

1. Duffy, Daniel Q.; Shaw, Stephanie A.; Bare, William D.; Goldsby, Kenneth A. *J. Chem. Educ.* **1995,** *72,* 734–736.
2. Editorial Staff. *J. Chem. Educ.* **1997,** *74,* 1328A–1328B.
3. Prokša, Miroslav; Tȯthová, Anna. *J. Chem. Educ.* **2006,** *83,* 1471–1472.
4. Carvalho, Ana Paula; Mendonça, Ângela F. S. S.; Piedade, M. Fátima M. *J. Chem. Educ.* **2002,** *79,* 1464A.
5. Roser, Charles E.; McCluskey, Catherine L. *J. Chem. Educ.* **1999,** *76,* 638–639.
6. Peck, Larry; Irgolic, Kurt; O'Connor, Rod. *J. Chem. Educ.* **1980,** *57,* 517–518.
7. Chen, Yueh-Huey; Yaung, Jing-Fun. *J. Chem. Educ.* **2002,** *79,* 848–850.
8. Zare, Richard N. *J. Chem. Educ.* **2002,** *79,* 1290–1291.
9. Rumpf, B.; Nicolaisen, H.; Ocal, C.; Maurer, G. *J. Solution Chem.* **1994,** *23,* 431–448.
10. Suzuki, Chieko. *J. Chem. Educ.* **1995,** *72,* 912–913.
11. Antony, Erling; Mitchell, Lindsay; Nettenstrom, Lauren. *J. Chem. Educ.* **2000,** *77,* 1180–1181.
12. Figueira, Alvaro Rocha; Coch, Juan; Zepica, Marilene. *J. Chem. Educ.* **1988,** *65,* 1060.

Supporting *JCE Online* Material

http://www.jce.divched.org/Journal/Issues/2008/Oct/abs1382.html

Abstract and keywords

Full text (PDF)
- Links to cited *JCE* articles
- Figure 2 in color